Current part is item (0) on diagram. Available at www.oshkoshequipment.com

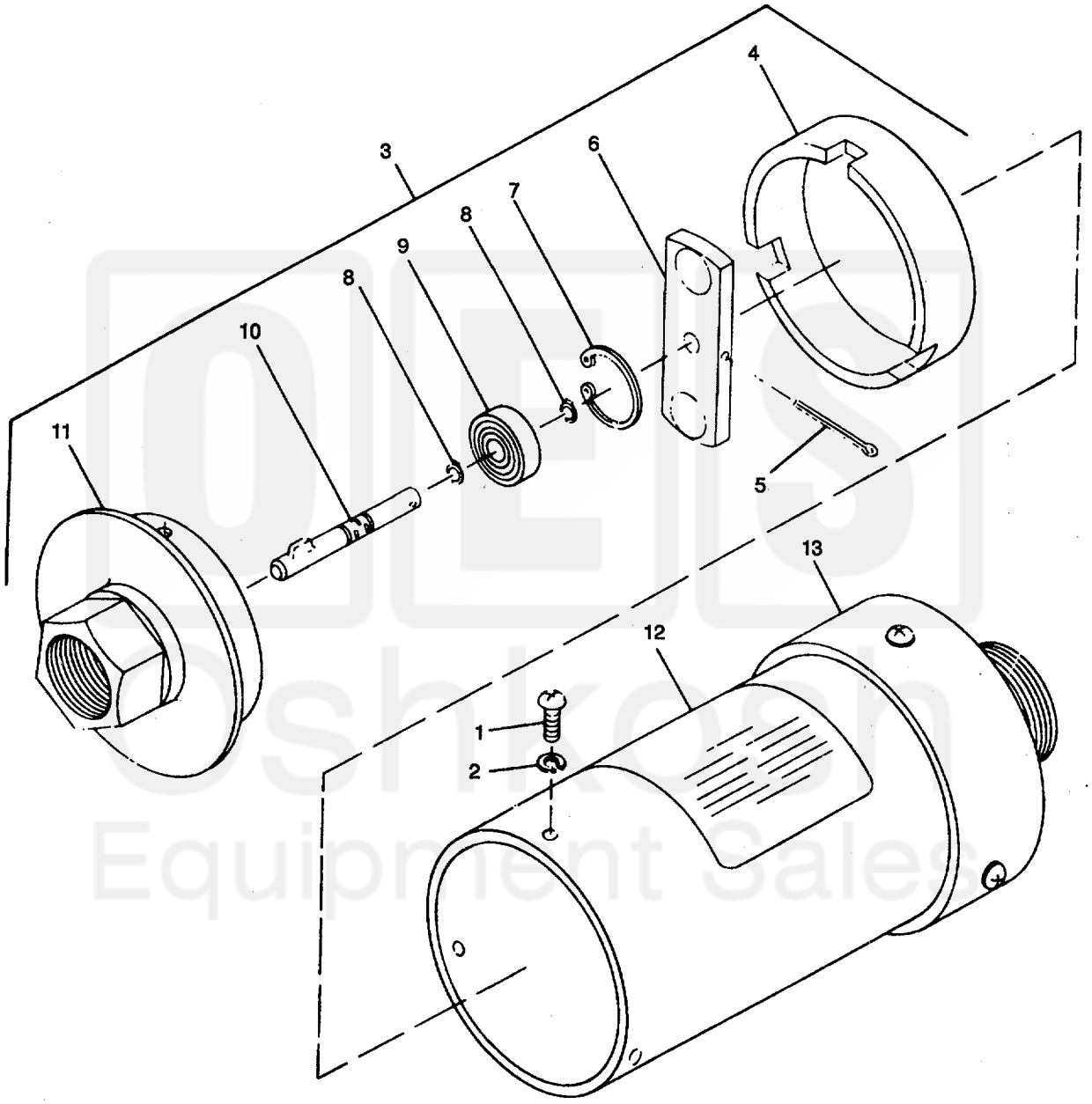

USED ON SERIAL NUMBERS FZ-01299 ON, FOR 50/60 Hz AND SERIAL NUMBERS FZ-06399 ON, FOR 400 Hz

USED ON SERIAL NUMBERS FZ03001 THRU FZ05985 FOR 50/60 Hz AND SERIAL NUMBERS FZ07001 THRU FZ09810 FOR 400 Hz

Figure 90. Switch Overspeed.

Current part is item (0) on diagram. Available at www.oshkoshequipment.com

Current part is item (0) on diagram. Available at www.oshkoshequipment.com

(1) ILLUSTRATION		(2) SMR CODE				(3) USMC		(4)	(5) DESCRIPTION			(6)	(7)	(8)
(a) FIG NO.	(b) ITEM NO.	a ARMY	b AIR FORCE	c NAVY	d USMC	a SSI	b REPL FACTOR	NATIONAL STOCK NUMBER	REF NUMBER	MFR CODE	USABLE ON CODE	U/M	QTY INC IN UNIT	USMC QTY PER EQUIP
90		PAFZZ	PAOOO	XBGZZ	PAFFF	-	.700	5930-01-023-4343	SWITCH OVERSPEED 70-1105-4 72-2203-1 (USED ON SIN FZ-01299 ON)	ABDF (30554) (54125)		EA	1	1
90		PAFZZ	PAOOO	XBGZZ	PAFZZ			5930-01-018-1888	SWITCH OVERSPEED 70-1105-3 72-22053-2 (USED ON SIN FZ-06399 ON)	CF (30554) (54125)		EA	1	1
90	1	PAFZZ	PAOZZ	XBGGG	PAFZZ	D	.008	5305-00-054-6652	SCREW, MACHINE MS51957-28	(96906)		EA	3	3
90	2	PAFZZ	PAOZZ	XBGGG	PAFZZ	D	.010	5310-00-045-4007	WASHER, LOCK MS35338-41	(96906)		EA	3	45
90	3	PAFZZ	PAOZZ	XBGZZ	PAFZZ			5930-01-018-6787	SWITCH SUBASSEMBLY 8170619	(54125)		EA	1	1
90	4	XAFZZ	XA	XBGZZ	XAFZZ				CAP, ROTOR 8170616	(54125)		EA	1	1
90	5	PAFZZ	PAOZZ	XBGZZ	PAFZZ	D	008	5315-00-017-9252	PIN, COTTER MS24665-136	(96906)		EA	1	1
90	6	XAFZZ	XA	XBGZZ	XAFZZ				ROTOR 8170614	(54125)		EA	1	1
90	7	PAFZZ	PAOZZ	XBGZZ	PAFZZ	D	009	5365-00-807-7968	RING, RETAINING MS16625-1068	(96906)		EA	1	1
90	8	PAFZZ	PAOZZ	XBGZZ	PAFZZ	D	009	5365-01-017-0573	RING, RETAINING 801-042	(54125)		EA	1	1
90	9	PAFZZ	PAOZZ	XBGZZ	PAFZZ	-	.050	3110-01015-5398	BEARING 801-058	(54125)		EA	1	1
90	10	XAFZZ	XA	XBGZZ	XAFZZ				SHAFT, KEYED 8170613	(54125)		EA	1	1
90	11	XAFZZ	XA	XBGZZ	MDOZZ				BASE 8170610	(54125)		EA	1	1
90	12	XCFZZ	XC	XBGZZ	MDOZZ				LABEL, TYPE I 8170618-1	ABDF (54125)		EA	1	1
90	12	XCFZZ	XC	XBGZZ	MDOZZ				LABEL, TYPE I I 8170618-2	CF (54125)		EA	1	1
90	13	XAFZZ	XA	XBGGG	XAFZZ				ELECTRONICS 8180100	(54125)		EA	1	1

Current part is item (0) on diagram. Available at www.oshkoshequipment.com